Sector Carrier Class 2-14

Sector Antenna With CARRIER CLASS Performance

RF ELEMENTS®

Sector Carrier Class 2-14

Package Contents

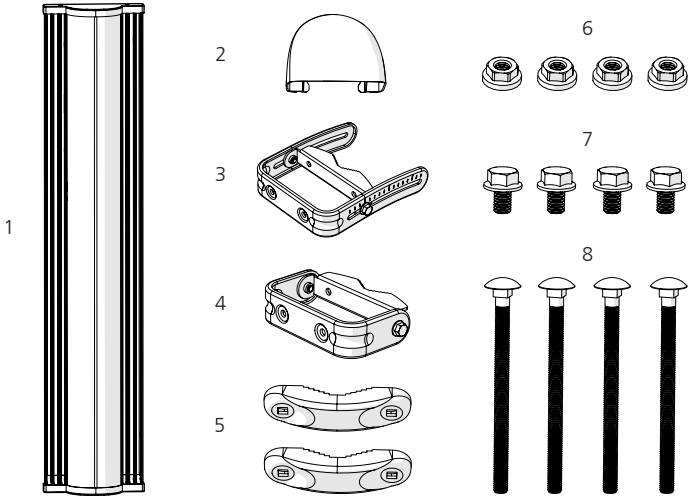

Number	Description	Quantity
1	Sector Antenna	1x
2	Cover	1x
3	Bracket Top	1x
4	Bracket Bottom	1x
5	Pole Clamp	2x
6	Nut M8	4x
7	M8 x 16mm Screw	4x
8	M8 x 120mm Screw	4x

Sector Carrier Class 2-14

Installation Guide

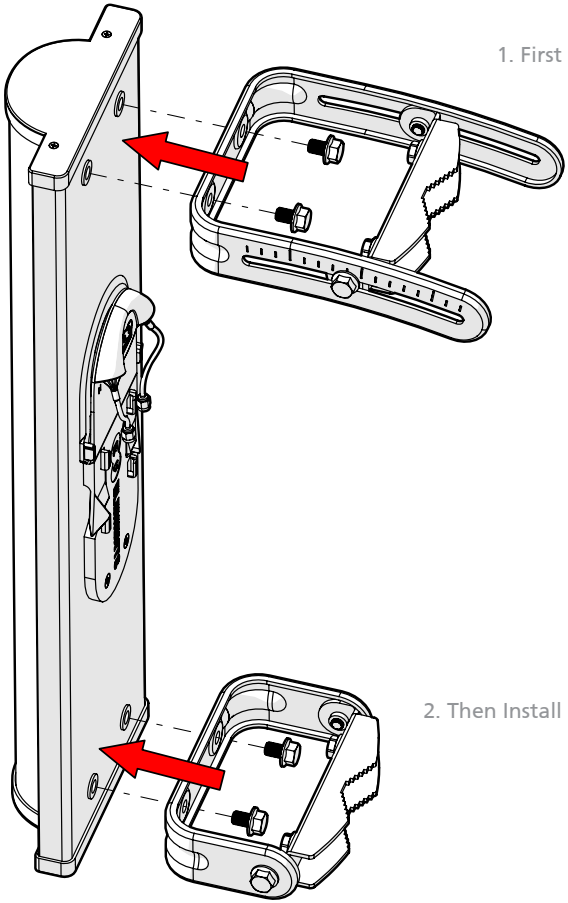

Sector Carrier Class 2-14

Installation Guide

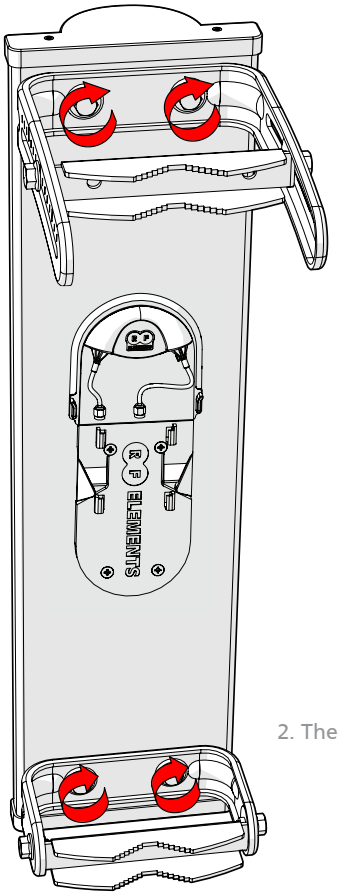

1. First Install Top

2. Then Install Bottom

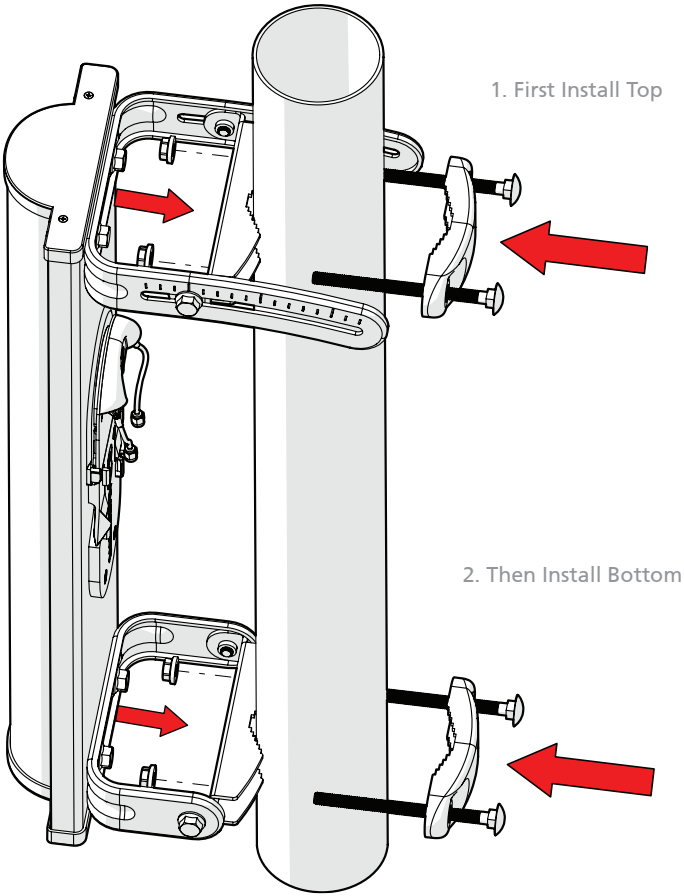
1. First Install Top
2. Then Install Bottom

Sector Carrier Class 2-14

Installation Guide

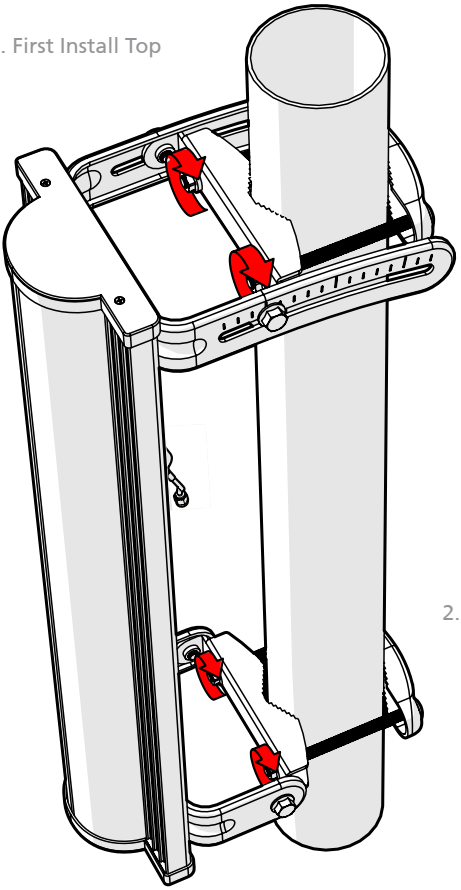

Sector Carrier Class 2-14

Installation Guide

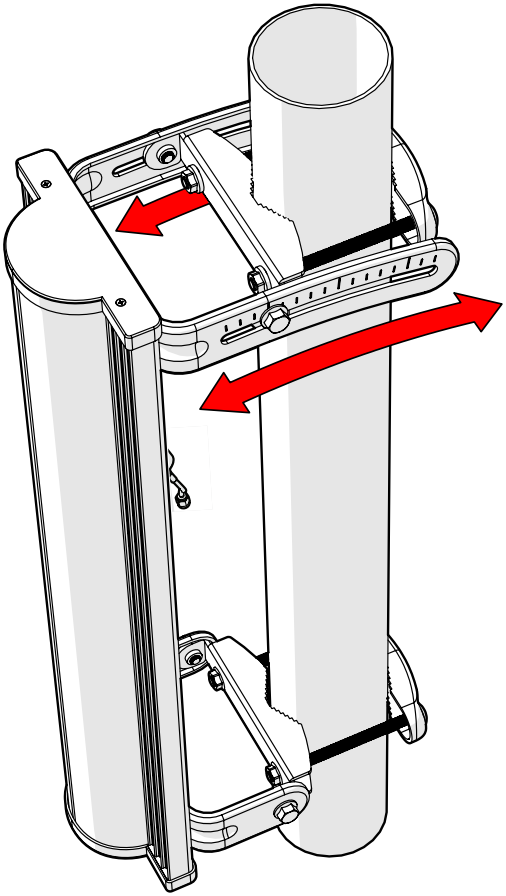

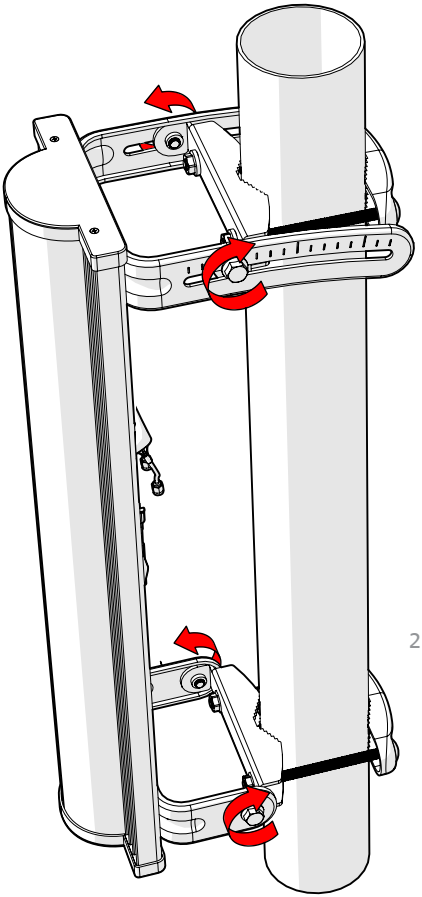

1. First Install Top

2. Then Install Bottom

Sector Carrier Class 2-14

Installation Guide

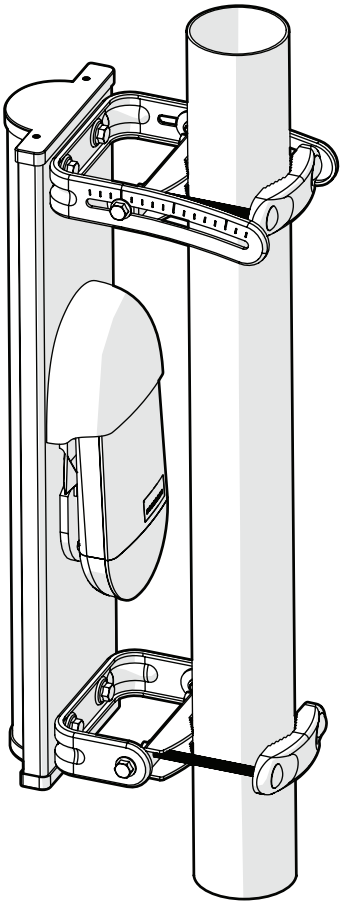

1

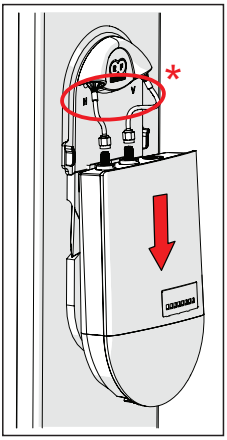

2

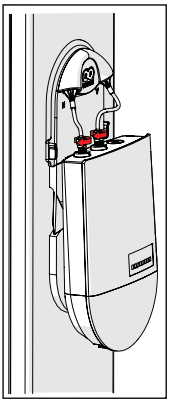

3

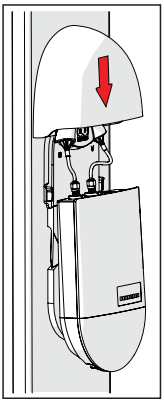

*Antenna Port H - Horizontal Polarization
Antenna Port V - Vertical Polarization

Compatible Devices:

RF elements®

StationBox® S
StationBox® S CARRIER CLASS
RockShield™

Ubiquiti Networks™

Rocket™ M2
Rocket™ M2 Titanium

Cambium Networks™

ePMP™ 1000 Connectorized Radio*

MikroTik™

BaseBox 2**

*with EasyBracket™ for ePMP™
**with EasyBracket™ 912

RF elements®, StationBox®, NanoBracket™ and RockShield™
are trademarks of RF elements s.r.o., Humenne, Slovakia.

Ubiquiti Networks™ and Rocket™ are trademarks
of Ubiquiti Networks, Inc., San Jose, California.

Cambium Networks™ and ePMP™ are trademarks
of Cambium Networks, Ltd., Rolling Meadows, Ilinois.

MikroTik™ is trademark of MikroTik,
Aizkraukles iela 23, Riga, LV-1006 Latvia.

All rights of respective trademark owners reserved.

RF elements s.r.o.
Phone: +421 2 3260 3711
info@rfelements.com
www.rfelements.com